CG30x2✚

ProDry2✚ Stack Drying Tumbler

ARCHITECTURAL/MECHANICAL
PRODUCT SPECIFICATIONS

ProDry2✚

Inverter Drive

PRODUCT SPECS	
Capacity *lbs*	2 x 30
Cylinder Diameter *inch*	30
Cylinder Depth *inch*	26
Cylinder Volume *cu ft*	10.6
Net Weight *lbs*	570
Crated Weight *lbs*	600
Machine Width *inch*	31.5
Machine Depth *inch*	42.8
Machine Height *inch*	76.3
Door Openings *inch*	23.7
Floor to Door *inch*	48.3 (top)
Shipping Dimensions *inch* WxDxH	32.5 x 47 x 79.9
Exhaust Diameter *inch*	8
Exhaust Air Flow *cfm*	400 per pocket
Exhaust Back Pressure (max) *WCI*	0.90 both pockets
Required Makeup Air *sq in*	220 both pockets
Electric Heating *kW*	21
Gas Connection *inch*	1/2 NPT
Gas Heating *BTU/h*	73,000 per pocket
Gas Pressure (max/recommended/min) Natural Gas *wc*	10.5 / 6.5 / 5
Propane *wc*	13 / 11 / 10
Steam Connection *inch*	3/4 NPT
Steam Heating *BTU/h* at 100 PSI	85,400 per pocket
BHP Consumption *BHP* at 100 PSI	3.2

GAS/STEAM MODELS

AVAILABLE VOLTAGES	WIRE CONDUCTOR	FULL LOAD AMPS	RECOMMENDED BREAKER SIZE
100-120/50-60/1	1W+N+G	16	20
200-240/50-60/1	2W+G	9	15
380-415/50-60/3	3W+G	6	15
440-480/50-60/3	3W+G	6	15

ELECTRIC MODELS - CLASSIC 21 kW

AVAILABLE VOLTAGES	WIRE CONDUCTOR	FULL LOAD AMPS	RECOMMENDED BREAKER SIZE
200-208/50-60/3	3W+G	61	80
230-240/50-60/3	3W+G	52	70
380/50-60/3	3W+G	33	45
400-415/50-60/3	3W+G	30	40
440/50-60/3	3W+G	29	40
460-480/50-60/3	3W+G	27	35

BACK VIEW

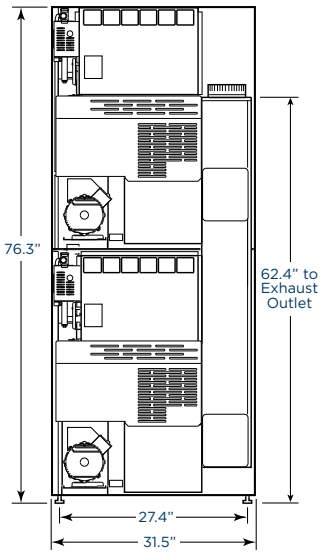

SIDE VIEW

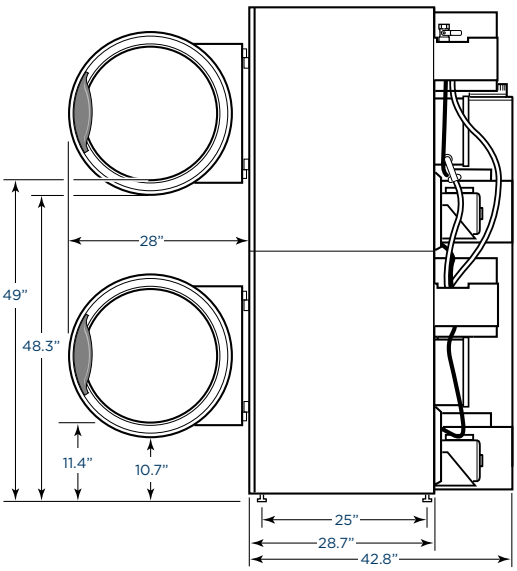

Electrical Connections - Electric Models

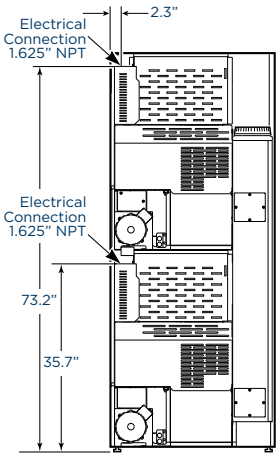

BACK VIEW - Steam

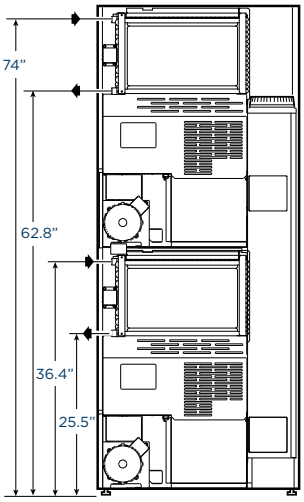

BACK VIEW - Gas

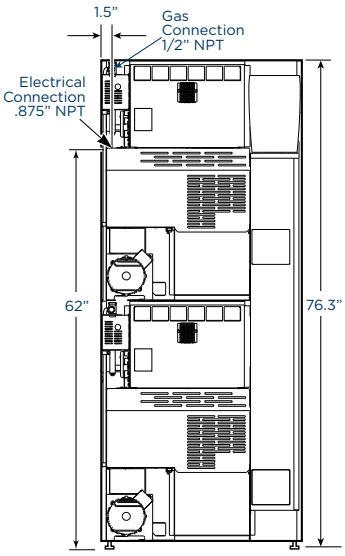

TOP VIEW - Steam

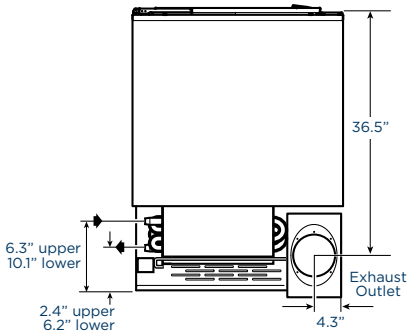

TOP VIEW - Gas

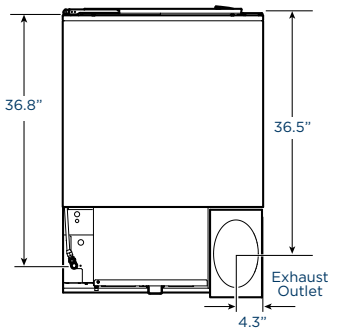

* Specifications subject to change without notice or obligation. Contact Continental Girbau at (800) 256-1073 for dimensions not shown or for clarification.

cgilaundry.com • (800) 256-1073
2500 State Road 44 • Oshkosh, WI 54904

CONTINENTAL GIRBAU®